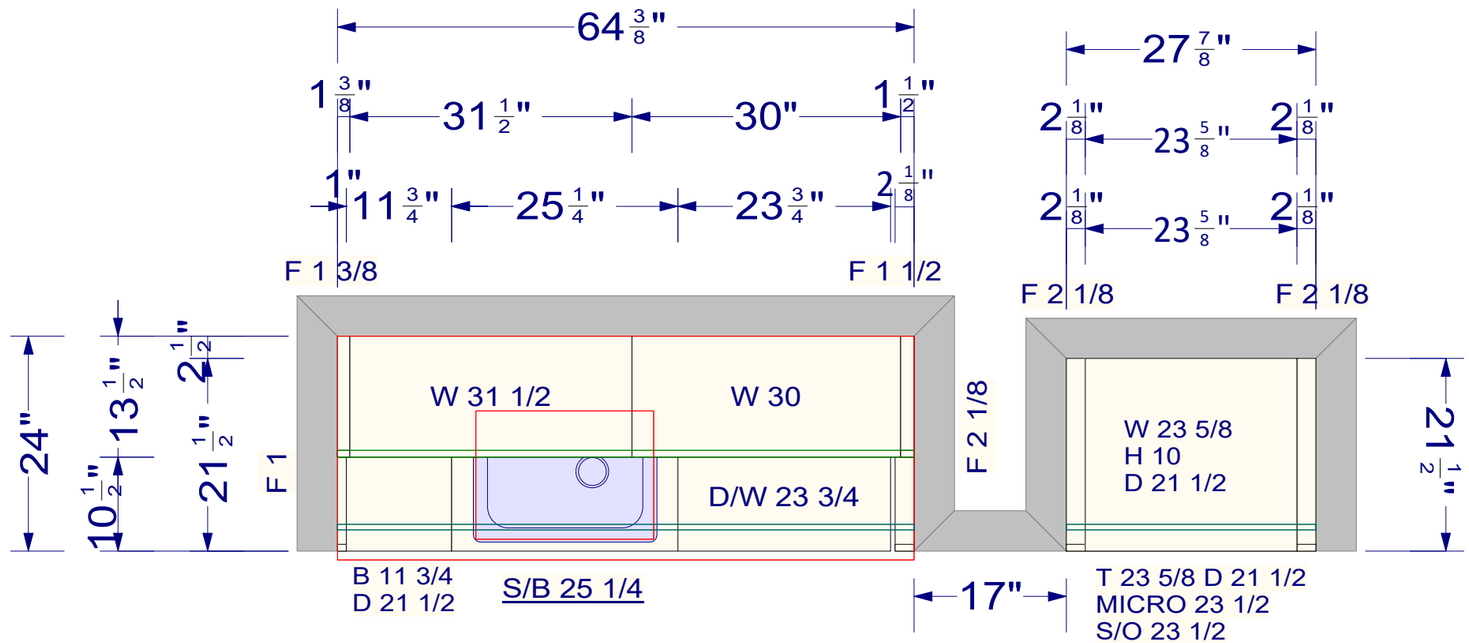

S10440 46A

OVERALL HEIGHT - 95 1/4"
FULL HEIGHT - 84 1/2"
UPPER HEIGHT - 37"
UPPER DEPTH - 13 1/2"

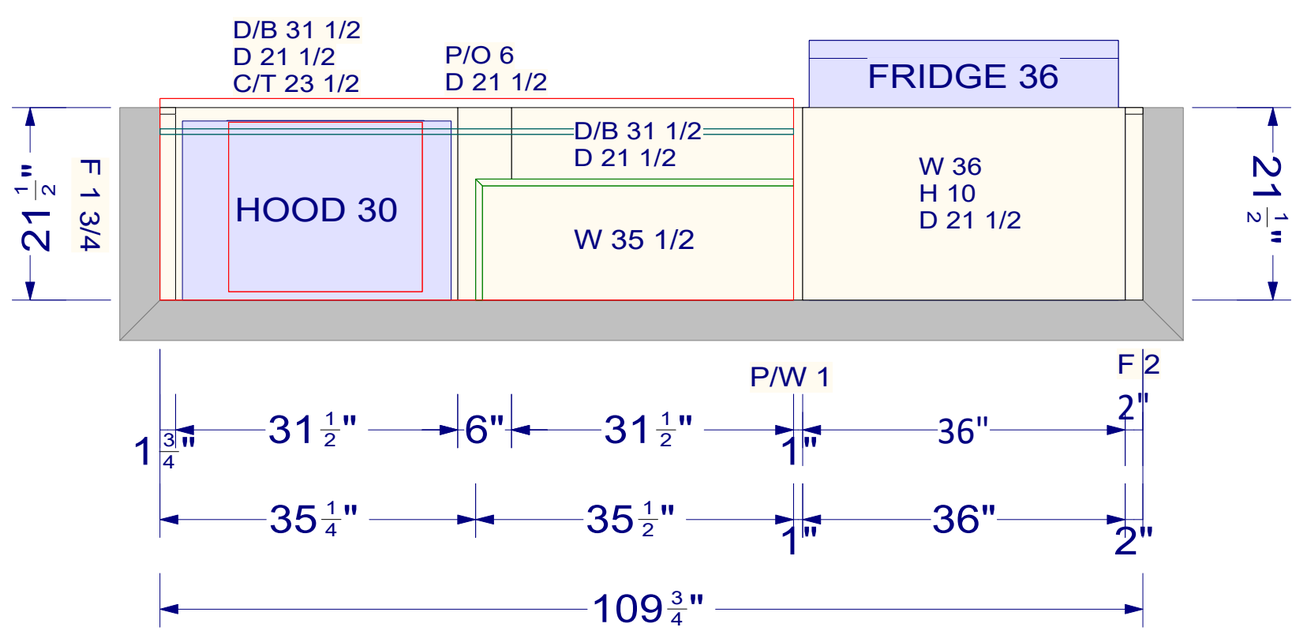

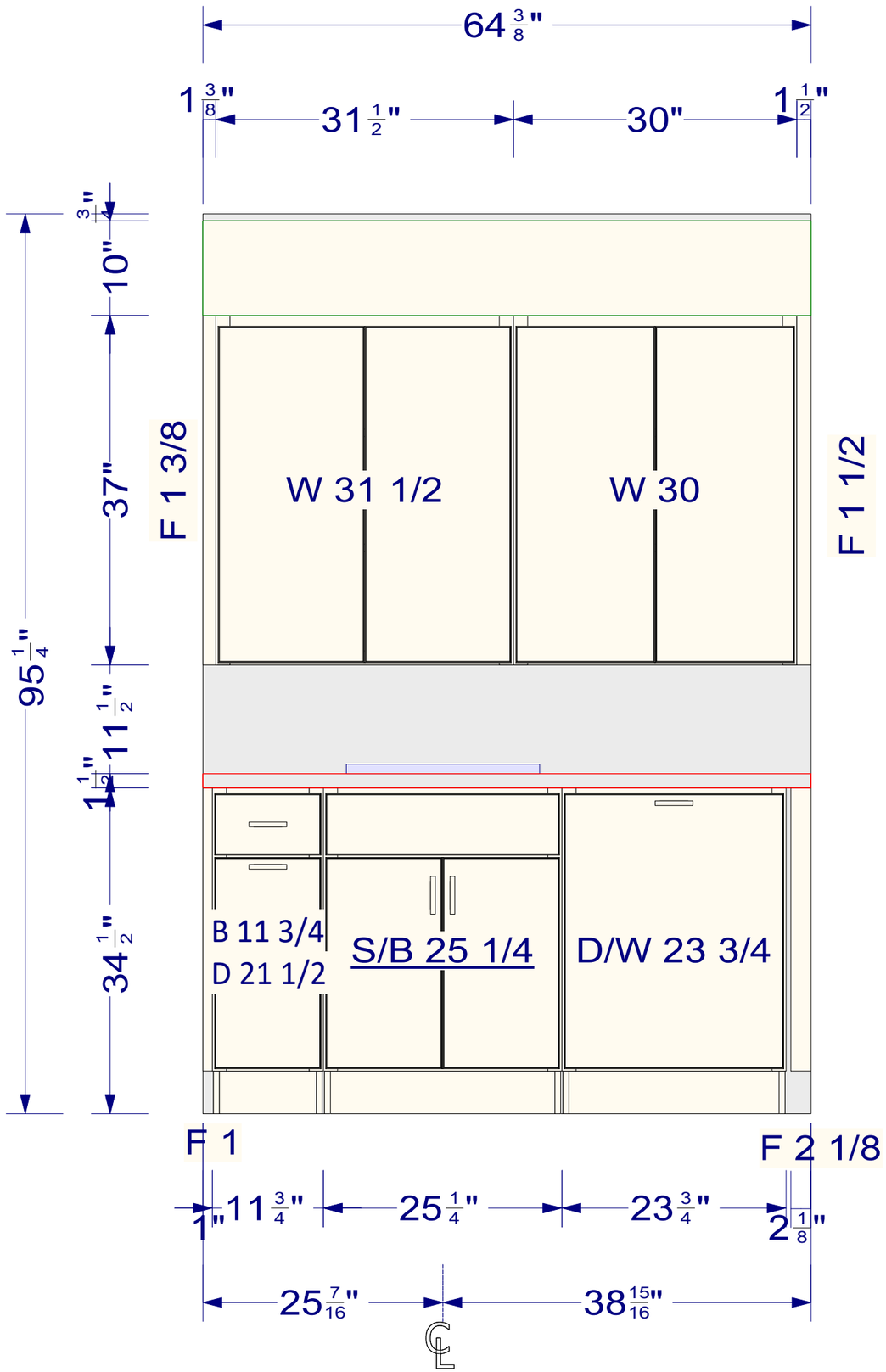
64 3/8"
1 3/8"
31 1/2"
30"
1 1/2"
3/4"
10"
37"
95 1/4"
11 1/2"
1 1/2"
34 1/2"
F 1 3/8
W 31 1/2
W 30
F 1 1/2
B 11 3/4
D 21 1/2
S/B 25 1/4
D/W 23 3/4
F 1
F 2 1/8
1"
11 3/4"
25 1/4"
23 3/4"
2 1/8"
25 7/16"
38 15/16"
℄

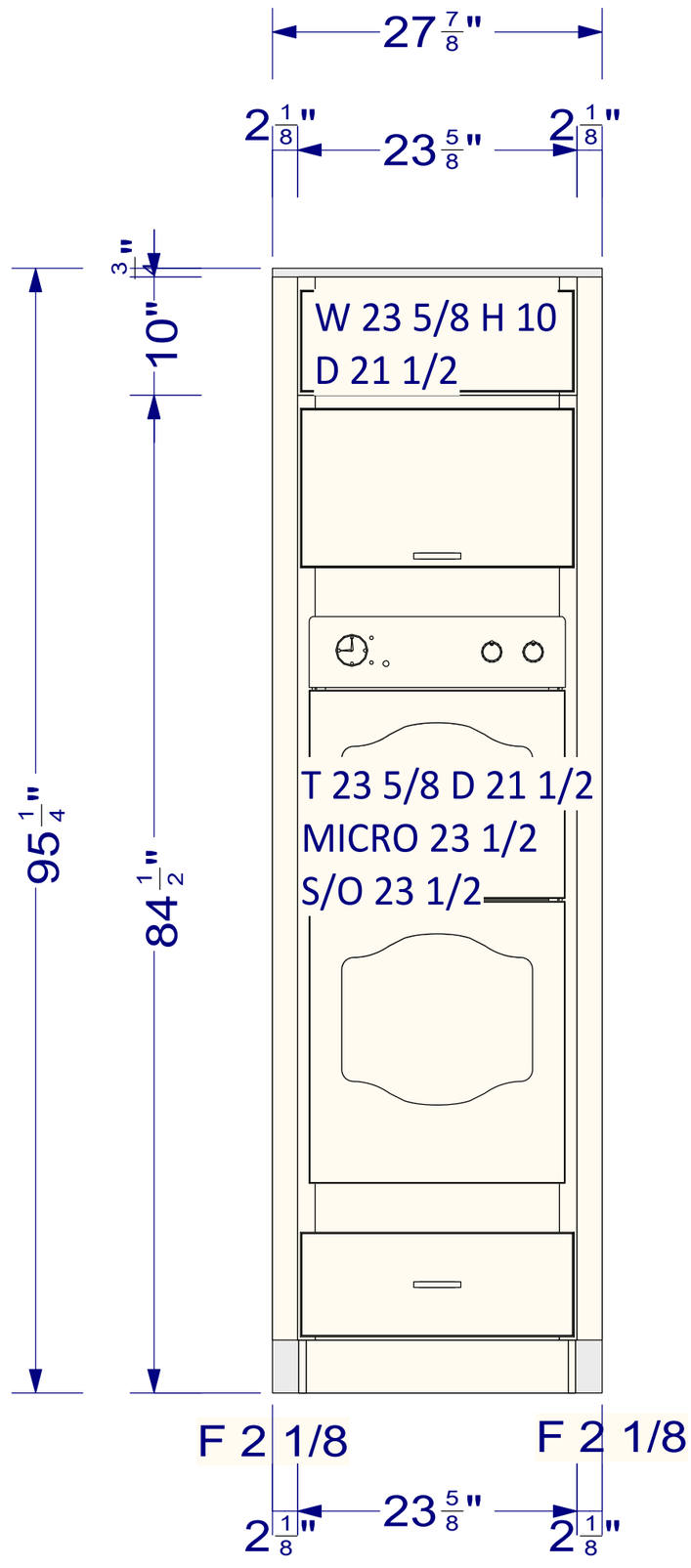
27 7/8"
2 1/8"
23 5/8"
2 1/8"
3"
10"
95 1/4"
84 1/2"
W 23 5/8 H 10
D 21 1/2
T 23 5/8 D 21 1/2
MICRO 23 1/2
S/O 23 1/2
F 2 1/8
F 2 1/8
2 1/8"
23 5/8"
2 1/8"

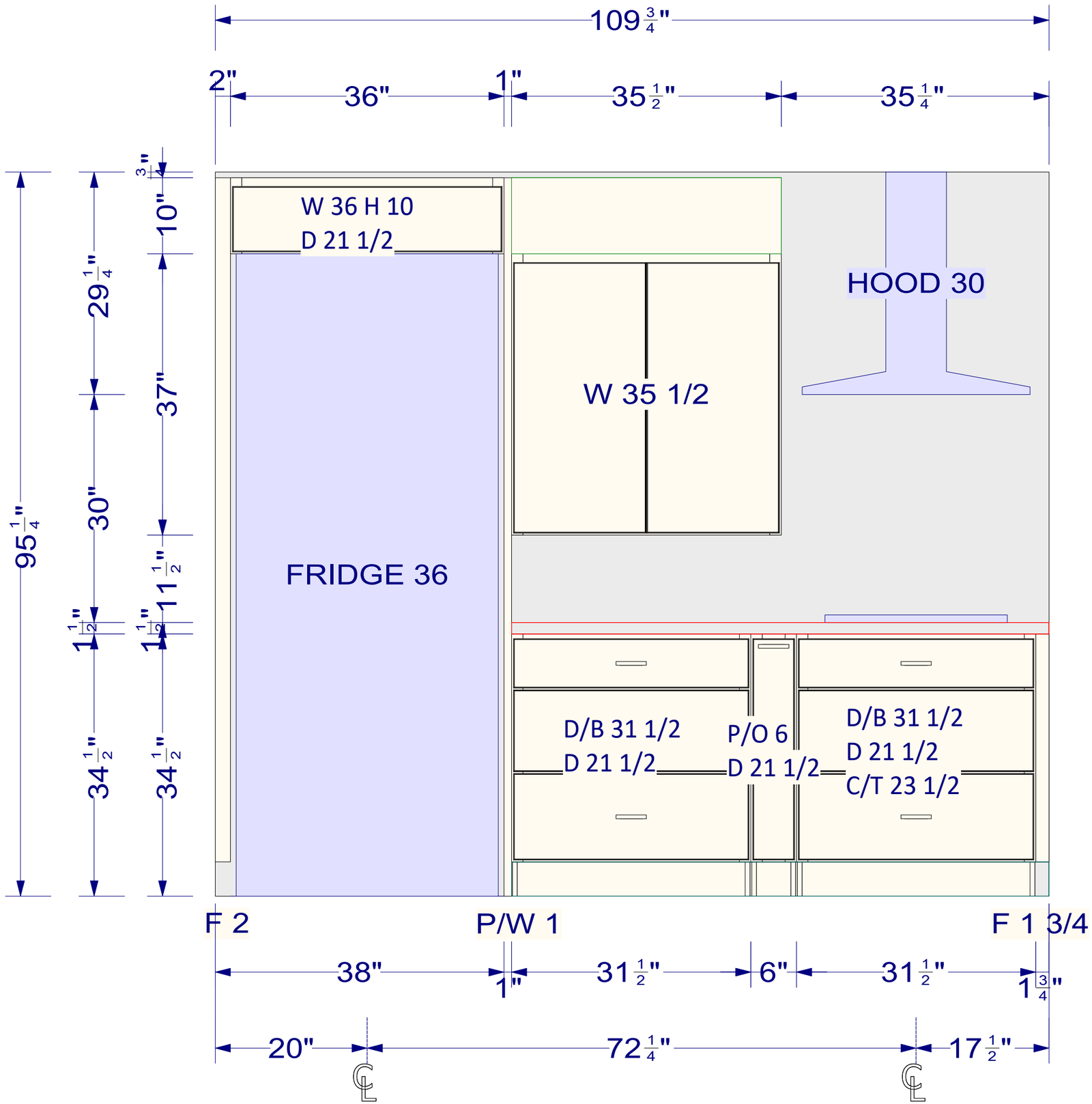
109 3/4"
2"
36"
1"
35 1/2"
35 1/4"
3/4"
10"
29 1/4"
37"
30"
95 1/4"
1 1/2"
11 1/2"
1 1/2"
34 1/2"
34 1/2"
W 36 H 10
D 21 1/2
HOOD 30
W 35 1/2
FRIDGE 36
D/B 31 1/2
D 21 1/2
P/O 6
D 21 1/2
D/B 31 1/2
D 21 1/2
C/T 23 1/2
F 2
P/W 1
F 1 3/4
38"
1"
31 1/2"
6"
31 1/2"
1 3/4"
20"
72 1/4"
17 1/2"